Universal Concentricity Gage

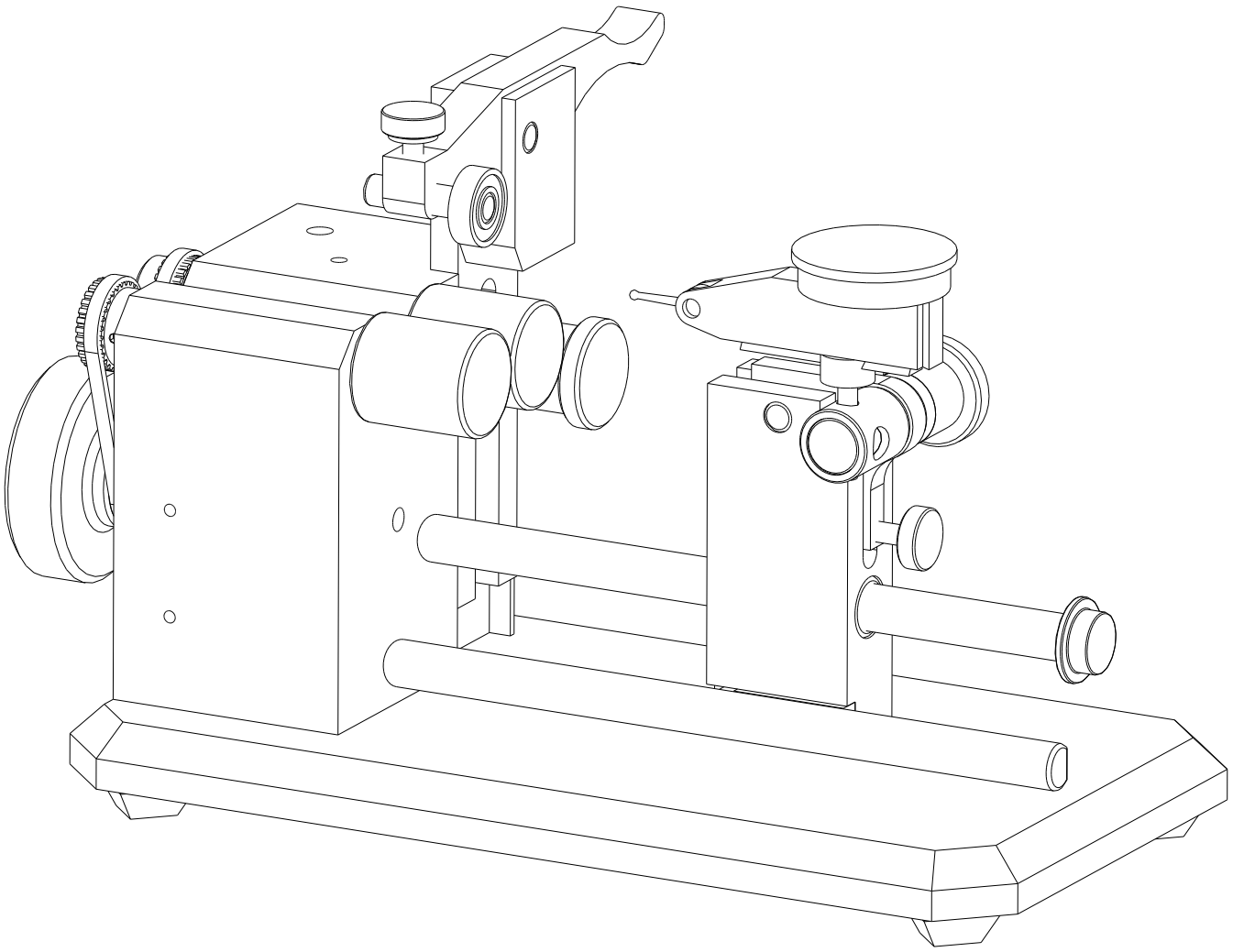

Model A-10

OPERATING AND MAINTENANCE MANUAL

Our Product –
Universal Punch Corp.'s patented Concentricity Gage System is an accurate and reliable instrument to measure critical features on cylindrical parts. Most Models can offer less than 2 microns (.000080") accuracy that has proven results in a variety of industrial applications. Continuous improvement to the modular design adapts to meet customer requirements and provide the flexibility necessary for maintaining quality.

1.0 The Gaging System –

The Gage System consists of four major features (See Figure 1)

1) Adjustable Yoke Assembly with Clamp Arm (A)
2) Indicator Carriers with Fine Adjustment (B)
3) Adjustable (Z-Axis) / Tilting Carriers (C)
4) Manual or Motorized Drive System with Timing Belts (D)

Note: All Figures used are for illustration purposes only and may not represent exact configuration. As features are discussed in this Manual, the orientation of the Gage is shown below.

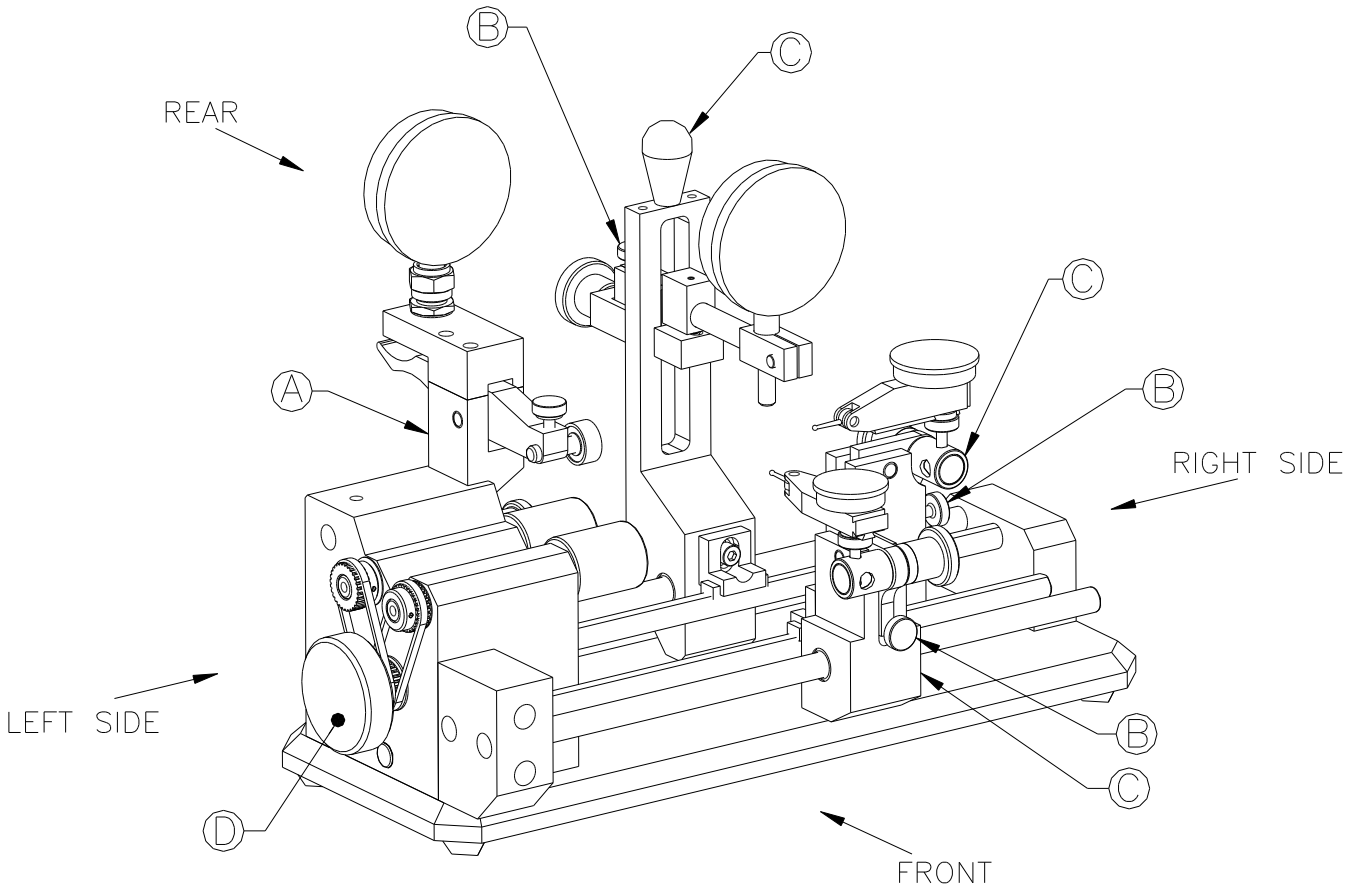

Figure 1. Gage Assembly Orientation

2.0 Concentricity Gage Operation –

Note: The following operation sequence is provided as a basis for loading, inspecting and unloading a part using a standard Gage Assembly. Special features and attachments that may be installed on a particular gage are not addressed. See Figure 1 for part references.

2.1 Prior to usage of the Gage, check Main Rollers for any dirt or contamination. If necessary, clean with alcohol and a soft rag.

2.2 Install Dial or Test Indicator(s) into proper Carrier(s) (C) and tighten in place using the Swivel Clamp Assembly Thumb Screw or Rear Carrier Socket Head Cap Screw.

2.3 Slide and/or tilt Carrier(s) (C) out of the way to provide clearance to install part.

2.4 Loosen Clamp Knob on Yoke Assembly (A) and raise to a position that allows easy installation of part.

2.5 Place part on Main Rollers and lower Yoke Assembly (A) into a position that causes the Top Roller on the Clamp Arm to contact the part diameter.

2.6 Continue to lower the Yoke Assembly (A) so that the spring under the Clamp Arm begins to compress. Clamp Arm should rest at approximately a fifteen (15) degree angle for proper pressure on part.

2.7 Tighten Clamp Knob on Yoke Assembly (A) to secure in place.

2.8 Tilt Carrier(s) (C) to vertical position.

2.9 Slide Carrier(s) (C) along Shafts (Z-axis) into position required to obtain optimal measurements.

2.10 Loosen Swivel Clamp Assembly Thumb Screw or Rear Carrier Socket Head Cap Screw holding Indicator(s) and adjust them to the proper position.

2.11 After Indicator is close to measurement area, secure in place by tightening Swivel Clamp Assembly Thumb Screw or Rear Carrier Socket Head Cap Screw.

2.12 Zero Indicator by using Fine Adjust Knob (B). Ensure that Dial is set at “0”.

2.13 Using the Drive System (D), rotate part slowly and note the movements of the Indicator.

2.14 Move indicator to new position (if required) and repeat Step 2.12 and 2.13.

2.15 Slide Carrier(s) (C) along Shafts and tilt out of position to allow accessibility of part.

2.16 Depress Clamp Arm on Yoke Assembly (A) to raise Top Roller off part.

2.17 Remove part from Main Rollers.

2.18 While keeping Clamp Arm depressed, place another part on Main Rollers, release Clamp Arm and repeat Steps 2.8 thru 2.13.

3.0 Adjustable Yoke Assembly – (See Figures 2 and 3)
Adjustable, multi-position Arm Yoke Assembly offers a variety of clamping pressures and positions to accommodate different part diameters. When the proper position is obtained, the Adjusting Knob is tightened to hold it securely in place.

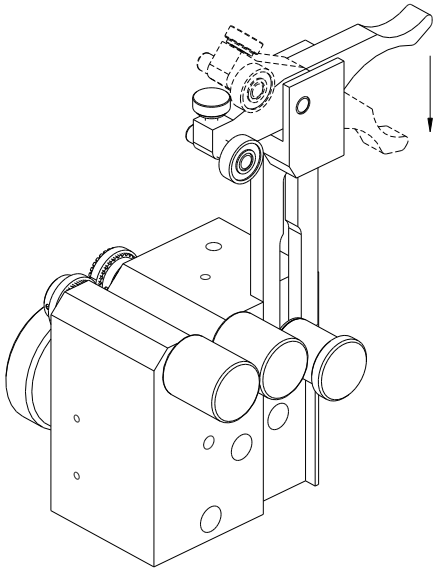

Figure 2. Yoke in raised position

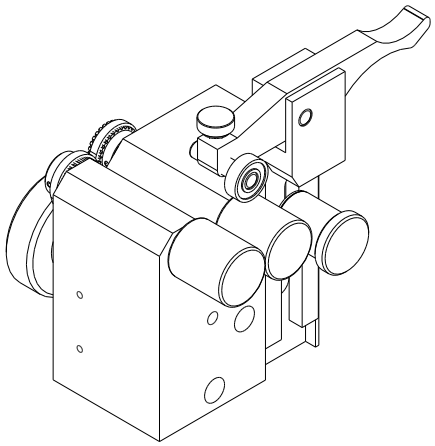

Figure 3. Yoke in lowered position.

4.0 Gage Drive System – (See Figures 4 and 5)
All Gages come standard with a Manual Drive System consisting of a Drive Knob, two (2) Drive Pulleys and two (2) Timing Belts. This design provides a smooth and constant part rotation while inspecting. UPC also provides an optional Motorized Drive System (fixed or variable speed) available in 110/120 or 220/230 volts. Clockwise and counterclockwise rotation may have an effect on the movement of the part. (See Top Stop and Back Stop Assemblies, Sections 9.0 and 10.0)

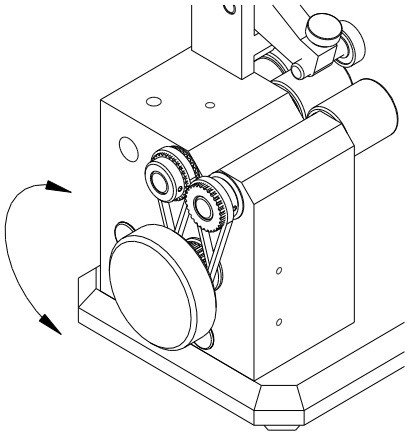

Figure 4. Manual Drive System

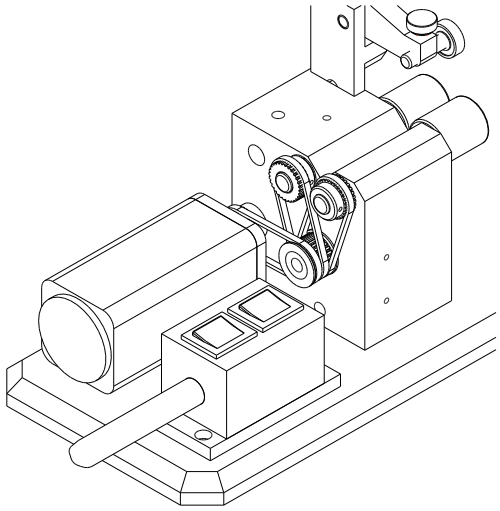

Figure 5. Motorized Drive System

5.0 Indicator Carriers – (See Figures 6 and 7)

All Standard Indicator Carriers assure accurate Indicator Probe positioning and zeroing and provide smooth Indicator movement to increase measuring performance and accuracy. Carriers offer a variety of positions along the Z-axis of the Gage to accommodate various lengths. They can be used with horizontal test indicators for checking surfaces (runout), parallel test indicators to check faces (runout or perpendicularity) or with standard dial indicators. Adjustable Rod Stops are available to maintain Carrier position for repeated measurements.

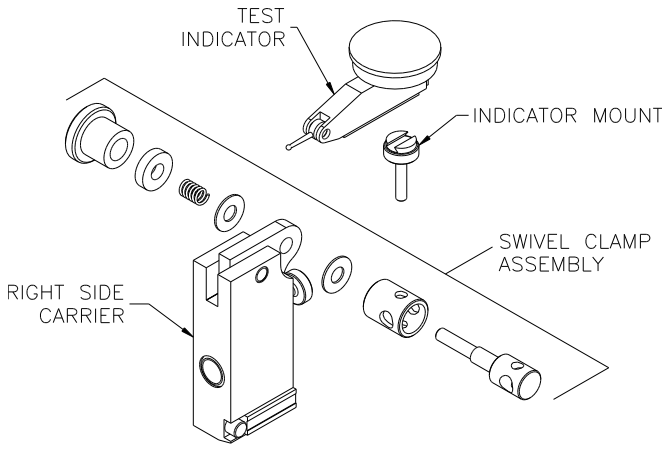

Figure 6. Right Side Carrier Assembly

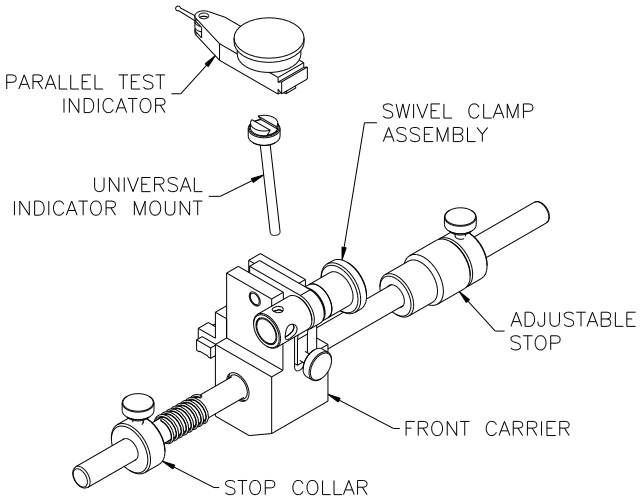

Figure 7. Front Carrier Assembly

6.0 Rear Vertical Carriers – (See Figures 8 and 9)

Some Concentricity Gage Models come standard with a Rear Vertical Carrier. These Carriers also offer various positions along the Z-axis, tilt-away for loading and unloading of parts and the option to use a Dial Indicator instead of a Test Indicator. The can be supplied in a variety of configurations. Figure 8 shows a standard Rear Vertical Carrier Assembly with a Dial Indicator Holder sub-assembly. The Carrier can also be provided with a Roller Checking Attachment (See Figure 9).

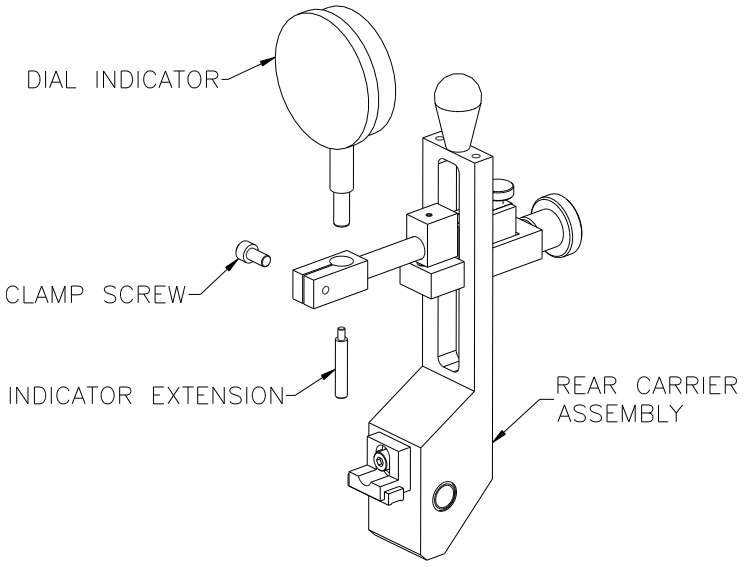

Figure 8. Rear Vertical Carrier with Dial Indicator

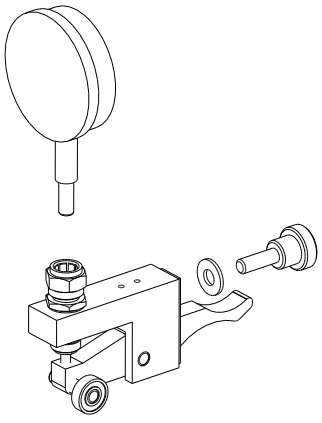

Figure 9. Roller Checking Attachment

7.0 Rear Carrier Fine Adjustment – (See Figures 10 and 11)
Assemblies can be provided with a Fine Adjust Attachment for Indicator movement. Figure 10 shows a Dial Indicator Holder with Fine Adjust and Figure 11 shows a Roller Checking Attachment with Fine Adjust. All of the options mentioned utilize the same basic Carrier.

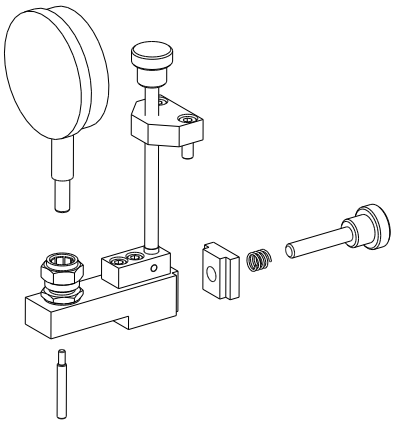

Figure 10. Dial Indicator Holder With Fine Adjust

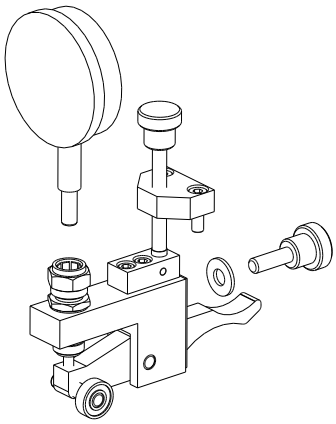

Figure 11. Roller Checking Attachment with Fine Adjust

8.0 Tilt-away and Fine Adjust – (See Figures 12 and 13)
The standard Indicator Carriers have three design features that allow quick and easy set-up. The first is the tilt-away feature that allows the user to move the carrier out of position for easier loading and unloading of parts (See Figure 12). The second is the fine adjust knob (A) (See Figure 13). Once a carrier is in close proximity to the part, the user can bring the tip of the indicator into position and zero it out. Lastly, the Carriers are adjustable along the shafts (Z-axis) for different part lengths.

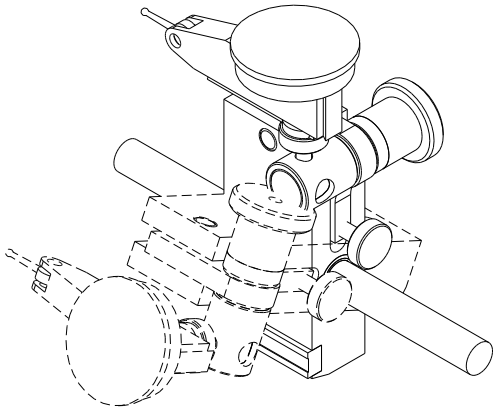

Figure 12. Tilt-away function

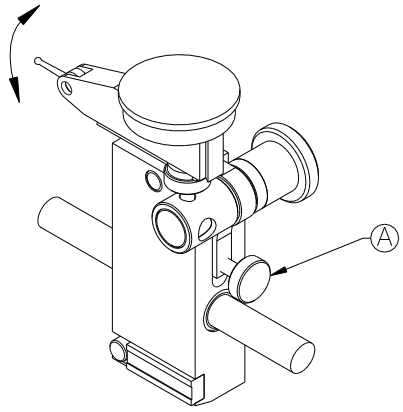

Figure 13. Fine adjust feature

9.0 Top Stop Set-up – (See Figures 14 and 15)

The Top Stop and Flat Plate Top Stop Assemblies are available as optional items to ensure that the part being inspected does not travel in a linear direction and produce false readings. Figure 14 shows a standard Top Stop Assembly that can be used with all Models. The Thumb Screw is loosened and the Pin is extended to contact the back end of the part. Figure 15 shows a Flat Plate Top Stop Assembly available for the –10 and 20 Models only. This assembly has an additional vertical adjustment that can be used to accommodate various part diameters. There are also different pin diameters available for more or less contact area.

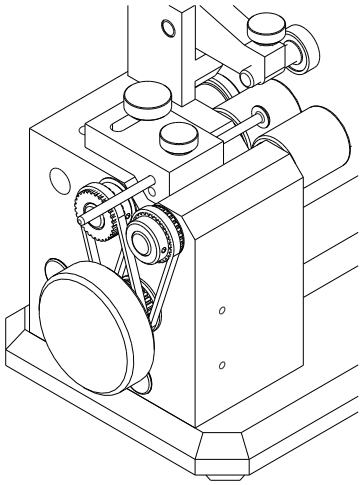

Figure 14. Top Stop (All Models)

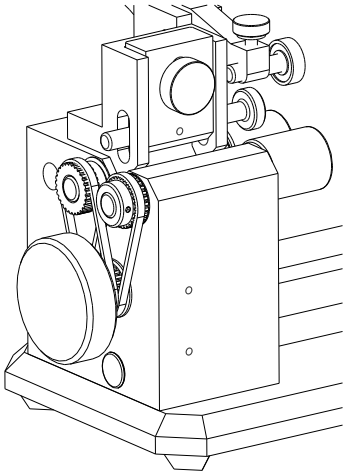

Figure 15. Flat Plate Top Stop (Models –10 and –20 only)

10.0 Back Stop Set-up – (See Figures 16 and 17)

The Back Stop Assembly is another option available to ensure that the part does not travel in a linear direction. It maintains part stability, ensuring proper readings. The Back Stop Assembly is installed in the rear of the Main Block and can be adjusted to various positions to accommodate various lengths and diameters using the two Thumb Screw knobs.

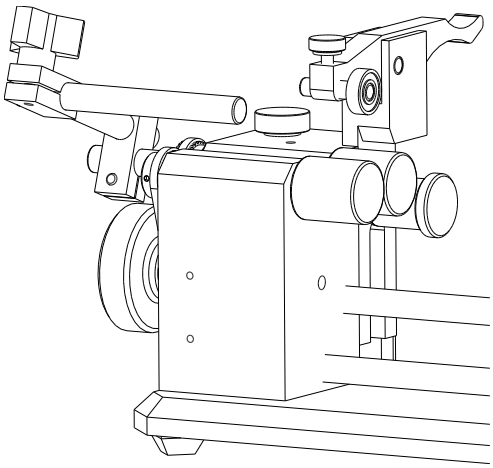

Figure 16. Back Stop Assembly (Front view)

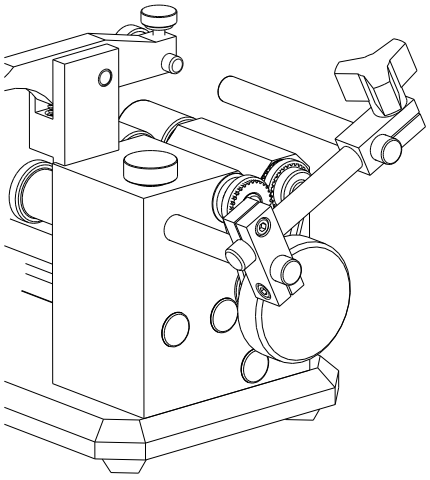

Figure 17. Back Stop Assembly (Rear view)

11.0 Maintenance / Calibration Schedule

The recalibration of the Gage Assembly is to be done by authorized personnel only. The gage can be returned to UPC for a complete calibration, cleaning and certification. The schedule for calibration is as follows:

- Every 180 days (6 months)

The calibration schedule recommended by UPC is based on the following criteria:

1. Parts that are being inspected on the Gage are a form of steel material.
2. Gage usage, either on the shop floor or in an inspection area, is a maximum of six hours per day.

> Note: If other types of abrasive or carbide materials are being used and, the usage time exceeds six hours, then the scheduled interval will be half of the time duration indicated above.

12.0 Visual Inspections

The following items shall be visually inspected for cracks, wear, scratches, rust and proper fit according to the schedule identified:

	Weekly	Monthly	Yearly
Main Rollers	X		
Top Rollers	X		
Drive Belts		X	
Carrier Shafts		X	
Springs			X
Bearing and Liners			X
Knobs			X
Nylon Washers			X
Rubber Mounting Feet			X

Contact Universal Punch Corp. to obtain an Illustrated Parts Breakdown Drawing for a particular Gage Model. Some replacement parts may be ordered by utilizing the drawing and referencing the appropriate Part Number(s).

13.0 Main Roller Replacement – (See Figure 18)

Note: This procedure shall only be performed on standard Gage Models (Black). Main Roller replacement on precision Models (Gold) shall only be performed by Universal Punch Corp.

The Main Rollers on the Concentricity Gage may be replaced if they are worn, scratched or have been in use for a long period of time. Figure 18 shows a typical Main Block / Main Roller assembly. The following steps shall be followed to remove and replace any Main Roller:

13.1 Slowly rotate Drive Knob (C) and slide Belts (F) off of Drive Pulleys (D).
13.2 Using Hex Key, loosen Set Screw (E) on Drive Pulley (D).
13.3 Slide Drive Pulley (D) off shaft of Main Roller (B).
13.4 Remove Nylon Washer (G) from shaft of Main Roller (B).
13.5 Remove Main Roller (B) from Main Block (A).
13.6 Remove Nylon Washer (G) from shaft of Main Roller (B).

Note: Shaft of Main Roller shall be thoroughly cleaned prior to installation.

13.7 Lightly coat shaft of Main Roller (B) with Lubricant (Isoflex NBU-15 Mfr.: Kluber Lubrication).

Note: Replace any worn Nylon Washers (G).

13.8 Place Nylon Washer (G) onto shaft of Main Roller (B).
13.9 Slide Main Roller (B) into Main Block (A) from front.
13.10 Place Nylon Washer (G) onto shaft of Main Roller (B).
13.11 Install Drive Pulley (D) onto shaft of Main Roller (B).
13.12 Using Hex Key, tighten Set Screw (E) on Drive Pulley (D).
13.13 Repeat Steps 2 through 12 for second Main Roller.
13.14 Slowly rotate Drive Knob (C) and slide Belts (F) onto Drive Pulleys (D)

Note: After replacing Main Rollers, it is recommended that the assembly be calibrated in accordance with Section 14.0 of this manual. Runout of Main Rollers as specified in Section 14.6 must be maintained.

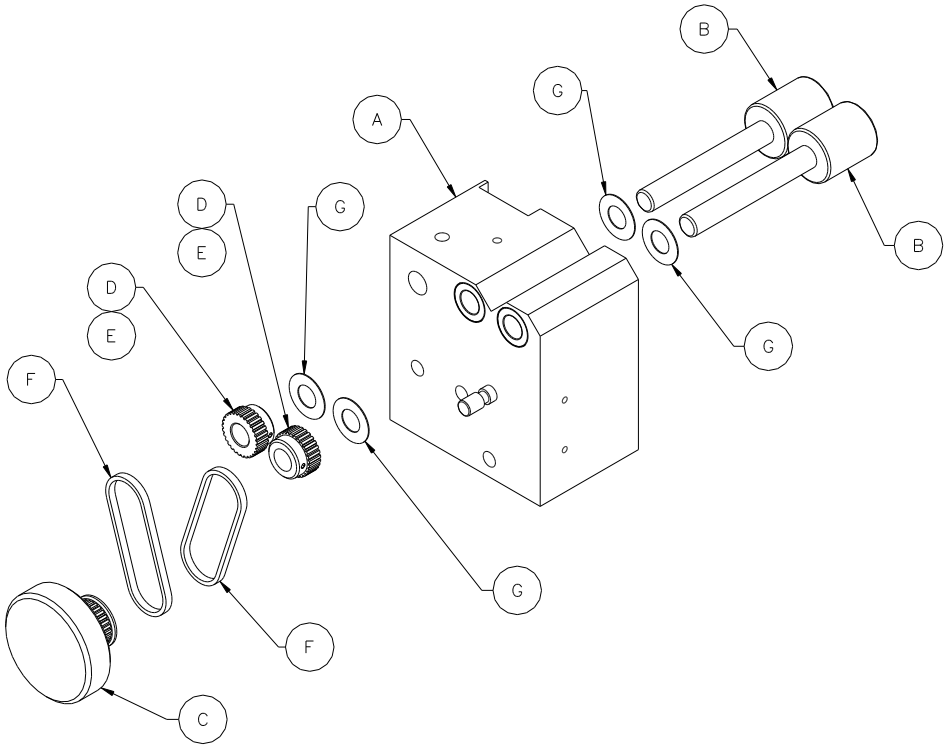

Figure 18. Main Roller / Main Block Assembly

14.0 Calibration

14.1 Purpose
- 14.1.1 To establish a standard procedure for the calibration of all Concentricity Gages.

14.2 Scope
- 14.2.1 All Concentricity Gages used to measure, test, inspect, or otherwise examine items to determine compliance with set specifications.
- 14.2.2 This procedure also applies to Gages returned to Universal Punch Corp. for routine calibration.

14.3 Definitions
- 14.3.1 Calibration – A procedure performed under specific conditions that establishes the relationship between values measured and known values derived from applicable standards.
- 14.3.1 Recalibration – A systematic check and adjustment of the accuracy and precision of a particular item performed at prescribed intervals.
- 14.3.2 Verification – A check for proper "zero" and limited confirmation of an items accuracy by comparing it to a known standard.
- 14.3.3 Runout (Measured in Full Indicator Movement or "FIM") – The measurement of surface variation that occurs relative to an axis of rotation. It is the total amount of movement (FIM) on an indicator after on full revolution of a part that is rotated about its datum axis. It may be measured parallel (outer surface) or perpendicular (face) to the axis.

14.4 Materials and Conditions required
- 14.4.1 Granite Surface Plate with floor vibration isolators
- 14.4.2 Calibrated gage Test Pin traceable to N.I.S.T. (size depends on Gage being tested)
- 14.4.3 Electronic Gage Head or Gage Probe (LVDT) with Amplifier at 10:1 ratio
- 14.4.4 Cleaning solution and Lint-free Cloth
- 14.4.5 Temperature controlled environment at ±2° with _° change per hour.

14.5 Special precautions
- 14.5.1 Verify that the calibration status of all equipment being used is current.
- 14.5.2 Do not use abrasive stones to remove imperfections on the Gage Roller surfaces.
- 14.5.3 Use caution when removing dirt, oil and other foreign substances when cleaning Gages.

14.6 Tolerances (Runout)
- 14.6.1 .0002" Max. for standard Gage assembly (Black Models)
- 14.6.2 .000070" Max. for precision Gage assembly (Gold Models)

14.7 Procedure
- 14.7.1 Verify that the identification on the Gage is distinct and in agreement with the Calibration History or the customer PO number. (New Gage / Recalibration).
- 14.7.2 Carefully examine the Main Rollers and the Top Roller for nicks, burrs, rust or other signs of mishandling or wear. Replace the Main Roller or Top Roller if necessary.
- 14.7.3 Carefully clean all exposed surfaces removing all foreign substances and particulate matter.
- 14.7.4 Move the Indicator Carrier to the right to provide sufficient clearance to insert the test pin into the Gage without interference.
- 14.7.5 Using the appropriate holder, mount the measuring instrument to the Indicator Carrier holder on the Concentricity Gage. Ensure that it is properly placed and rigidly held by the Holder / Indicator Carrier assembly.
- 14.7.6 Verify the runout to be measured and place the appropriate calibrated test pin into the Concentricity Gage between the Main Rollers and allow the Top Roller to clamp it securely. See Figure 19.

14.7.7 Move the Indicator Carrier holder with the measuring instrument assembly and bring the measuring instrument into position to measure the Calibrated test pin. This is a point approximately _ " from the end of the Main Rollers aligned with the centerline of the test pin in the vertical direction as shown in Figure 19.

14.7.8 Zero the measuring instrument according to the manufacturers instructions.

14.7.9 Using the drive system of the Concentricity Gage, rotate the test pin a minimum of three revolutions to establish seating in the Main Rollers.

14.7.10 Rotate the Drive Knob slowly and note the readings (FIM) from the measuring device.

14.7.11 Repeat 14.7.10, a minimum of 3 times to rule out any obvious incorrect readings.

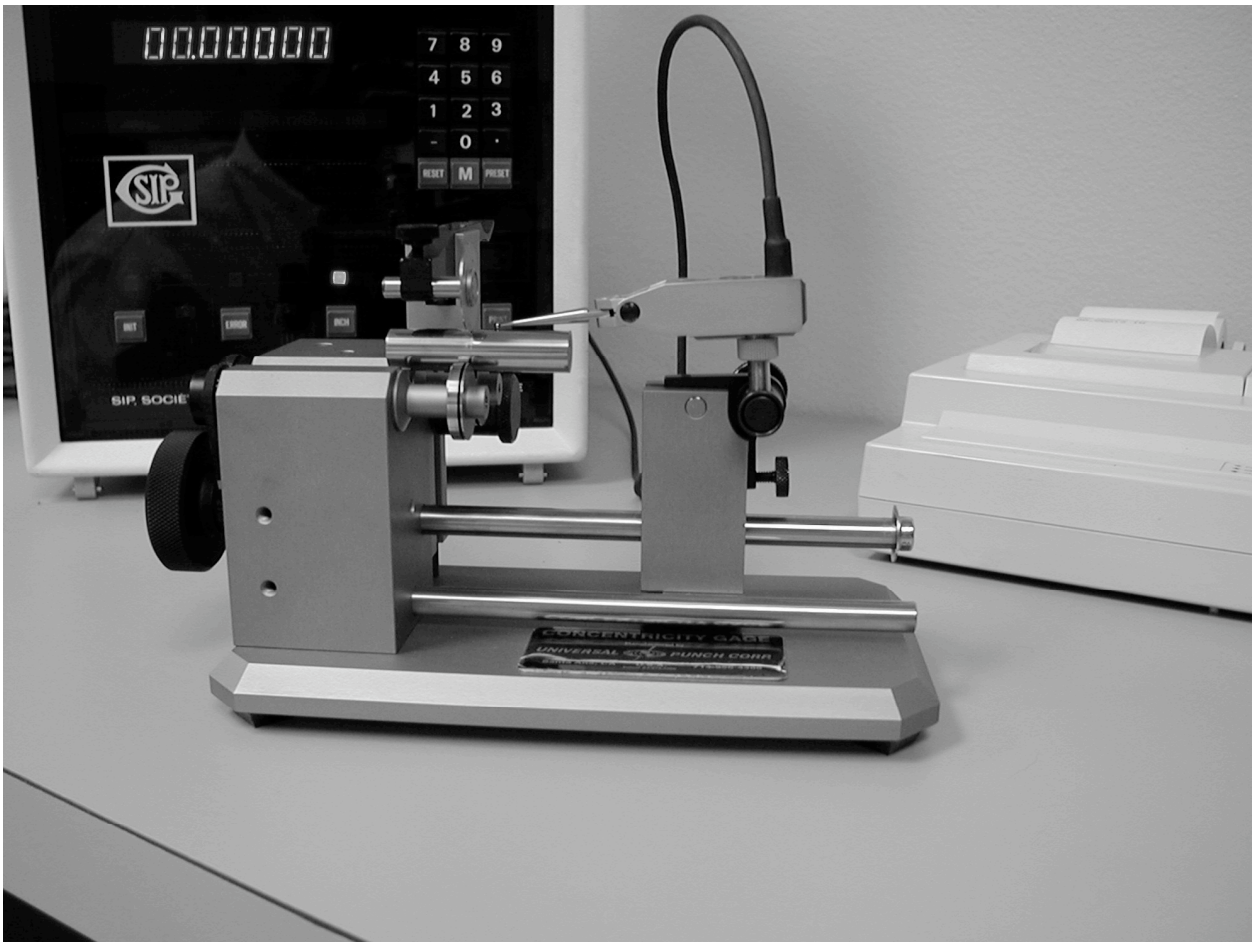

Figure 19. Calibration Set-up.
Model A-10 shown.

14.8 Storage and Handling

Active and inactive equipment shall be maintained, stored and handled in such a way as to preserve its accuracy and fitness for use. Equipment that is out of calibration or damaged shall be removed from use.